DESIGNHOUSE

502906

OUTDOOR LIGHTING

Highland 1-Light Outdoor Wall Light

Black

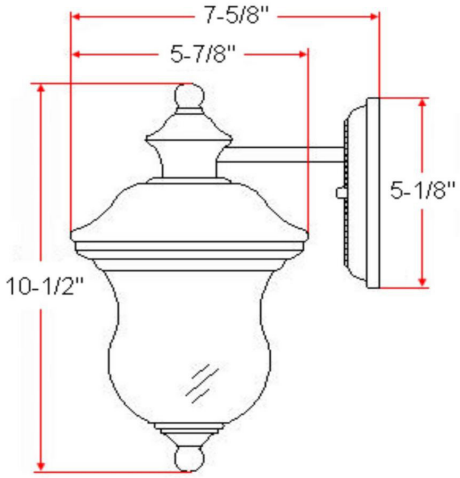

SPECIFICATIONS

MOUNTING:	Wall Mount
SLOPED CEILING ADAPTABLE:	No
LAMP TYPE 1:	1 lamp 60W Incandescent A19 Medium base bulb
BULB INCLUDED:	No
WATTS PER BULB:	60W
TOTAL WATTAGE:	60W
DIMMABLE:	Yes
MATERIAL CONSTRUCTION:	Steel
ASSEMBLED DIMENSIONS:	5.63" L x 10.5" H x 7.63" D
WEIGHT:	2.13 lbs.
BACKPLATE DIMENSIONS:	4.33" H x 4.33" W
CANOPY CEILING DIMENSIONS:	N/A
GLASS/SHADE DIMENSIONS:	N/A
GLASS/SHADE MATERIAL:	Glass
GLASS/SHADE TYPE:	Seedy
GLASS/SHADE COLOR:	Clear

LED BRIGHTNESS (LUMENS):	N/A
LED COLOR CORRELATED TEMPERATURE (CCT):	N/A
LED COLOR RENDERING INDEX (CRI):	N/A
LED EFFICACY:	N/A
LED AVERAGE RATED LIFE:	N/A
ENERGY EFFICIENT:	No
LIGHTING AMPS:	N/A
VOLTAGE:	120V

WARRANTY:	10-Year limited warranty
UL/ETL CERTIFICATION:	ETL
WET/DRY/DAMP LISTING:	Wet
ADA COMPLIANT:	No
ENERGY STAR CERTIFIED:	No

LIMITED 10 YEAR WARRANTY

ETL LISTED Intertek

WET LOCATION USE

TYPE:
JOB:
ORDER CODE:
APPROVALS:

6/3/2019

Design House reserves the right to make changes in materials, specifications & models at any time. Design House also reserves the right to discontinue product without notice or obligation.