SYLVANIA Lamps

ULTRA LED™ Selectable HIDr

Application

ULTRA LED HID replacement lamps are ideal for indoor high/low bay lighting and outdoor decorative post top fixtures in walkway lighting applications. The lumen and CCT selectable option allows for customizable light output replacing up to 400W HID applications.

Benefits and Features

- Lasts up to 5 times longer than HID lamps
- No warm-up time, instant on with full light output and stable color
- Consumes up to 76% less energy than equivalent HID lamps while delivering same light output
- Lumen and CCT selectable light enabled through physical controls located on the lamp.
- Continuous and standby dimming can be enabled on lamps 80W and higher, when paired with the optional snap-on motion/daylight sensor and remote control
- Passive cooling design (higher reliability with no internal fan)
- Rated for open and enclosed fixtures
- Up to 155 LPW
- 3000K, 4000K and 5000K selectable color temperatures
- CRI 80+
- 360° beam angle (or omnidirectional) with Type V distribution

Electrical

- 120-277VAC
- Power Factor >90%
- 6kV surge protection

Rated Life

- 50,000 hours (L_{70})

Warranty

- Standard 5 year lamp warranty

Ambient Operating Range

- -40°F to +122°F (-40°C to +50°C)

Wattage Comparison

Traditional Source	Traditional System Wattage	LED System Wattage	Energy Savings	Energy Savings Over Lamp Life
HID Metal Halide	50W	12W	76%	$209
HID Metal Halide	70W	18W	74%	$286
HID Metal Halide	100W	27W	73%	$401
HID Metal Halide	150W	36W	76%	$627
HID Metal Halide	150W	45W	70%	$577
HID Metal Halide	175W	54W	69%	$665
HID Metal Halide	250W	80W	68%	$935
HID Metal Halide	320W	100W	69%	$1210
HID Metal Halide	400W	120W	70%	$1540

Certifications and Listings

- IP64 Rated
- cULus
- RoHS
- FCC*
- Lead Free
- Mercury Free

*This device complies with Part 15 of the FCC rules. Operation is subject to the following two conditions: (1) this device may not cause harmful interference, and (2) this device must accept any interference received, including interference that may cause undesired operation. Please visit: www.SYLVANIA.com/fccpart15b for more information.

Installation

- Requires easy ballast by-pass
- Lamp operates directly on line voltage, 120-277VAC

Specification Data

Catalog #	Type
Project	
Comments	
Prepared by	

Ordering Guide

LED	XXX	HIDR	8	SC2	XXX
LED LED Lamps and Retrofits	Wattage 12, 18, 27, 36, 54, 80, 100 and 120	Lamp Type HID Replacement	CRI 8 = 80+	Color Temp SC2 = Selectable 3000K, 4000K or 5000K	Base Type MED = E26 Medium Base MOG = EX39 Mogul Base

Wattage Selectable Range per Color Temperature

				CCT Selectable					
				3000K		4000K		5000K	
Item Number		Power (W)	Wattage Selectable (W)	Total Lumens (lm)	Efficacy (LPW)	Total Lumens (lm)	Efficacy (LPW)	Total Lumens (lm)	Efficacy (LPW)
41006	LED12HIDR8SC2MED 4/CS 1/SKU	12W	–	1680	140	1860	155	1800	150
41007	LED18HIDR8SC2MED 4/CS 1/SKU	18W	–	2600	144	2800	155	2700	150
41008	LED27HIDR8SC2MED 4/CS 1/SKU	27W	27W	3780	140	4200	156	4050	150
			18W	2400	133	2700	150	2700	150
			12W	1600	133	1900	158	1800	150
41009	LED36HIDR8SC2MED 4/CS 1/SKU	36W	36W	5040	140	5600	156	5400	150
			27W	3700	137	4240	157	4200	156
			18W	2500	139	2860	159	2850	158
41010	LED45HIDR8SC2MOG 4/CS 1/SKU	45W	45W	6300	140	7000	156	6750	150
			36W	4900	136	5500	153	5400	150
			27W	3700	137	4250	157	4200	156
41011	LED54HIDR8SC2MOG 4/CS 1/SKU	54W	54W	7560	140	8400	156	8100	150
			45W	6200	138	6900	153	6800	151
			36W	5000	139	5600	156	5500	153
41012	LED80HIDR8SC2MOG 4/CS 1/SKU	80W	80W	11,200	140	12,400	155	12,000	150
			63W	8700	138	9700	154	9400	149
			54W	7600	141	8500	157	8300	154
41013	LED100HIDR8SC2MOG 4/CS 1/SKU	100W	100W	14,000	140	15,500	155	15,000	150
			80W	11,000	138	12,200	153	11,800	148
			63W	8800	140	9800	156	9600	152
41014	LED120HIDR8SC2MOG 4/CS 1/SKU	120W	120W	16,800	140	18,600	155	18,000	150
			100W	13,800	138	15,500	155	14,800	148
			80W	11,300	141	12,500	156	12,200	153

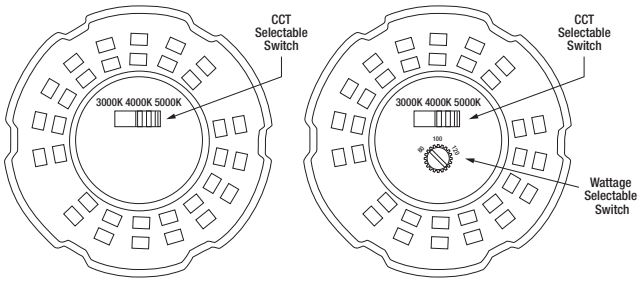

Ordering Information

Item Number	Ordering Abbreviation	Base Type	Replaces	Input Voltage (V)	Average Life (hrs)	CRI	Dimming[2,3]	Case Qty	DLC	CEC
41006	LED12HIDR8SC2MED 4/CS 1/SKU	Medium base	50W HID	120-277	50,000	80+	No	4	No	No
41007	LED18HIDR8SC2MED 4/CS 1/SKU	Medium base	70W HID	120-277	50,000	80+	No	4	No	Yes
41008	LED27HIDR8SC2MED 4/CS 1/SKU	Medium base	100W HID	120-277	50,000	80+	Yes	4	No	Yes
41009	LED36HIDR8SC2MED 4/CS 1/SKU	Medium base	150W HID	120-277	50,000	80+	Yes	4	No	Yes
41010	LED45HIDR8SC2MOG 4/CS 1/SKU	Mogul base	150W HID HO[1]	120-277	50,000	80+	Yes	4	Yes	Yes
41011	LED54HIDR8SC2MOG 4/CS 1/SKU	Mogul base	175W HID	120-277	50,000	80+	Yes	4	Yes	Yes
41012	LED80HIDR8SC2MOG 4/CS 1/SKU	Mogul base	250W HID	120-277	50,000	80+	Yes	4	Yes	Yes
41013	LED100HIDR8SC2MOG 4/CS 1/SKU	Mogul base	320W HID	120-277	50,000	80+	Yes	4	Yes	Yes
41014	LED120HIDR8SC2MOG 4/CS 1/SKU	Mogul base	400W HID	120-277	50,000	80+	Yes	4	Yes	Yes

[1]HO refers to a High Output lumen replacement.
[2]Dimming can be controlled through a physical knob on 27W–120W lamp types or when paired with optional motion/daylight sensor and remote control on 80W–120W lamp types.
[3]Not compatible with other dimmers.

DLC Information

Item Number	Ordering Abbreviation	DLC Number
41010	LED45HIDR8SC2MOG 4/CS 1/SKU	PL8V2Y4FL16Z
41011	LED54HIDR8SC2MOG 4/CS 1/SKU	PL2OGOJA6D3S
41012	LED80HIDR8SC2MOG 4/CS 1/SKU	PLQK2K7JJ9SJ
41013	LED100HIDR8SC2MOG 4/CS 1/SKU	PLFUQ880M2E4
41014	LED120HIDR8SC2MOG 4/CS 1/SKU	PLXJP4ISBPH0

Accessory Information*

Item Number	Ordering Abbreviation	Description
75055	LED/ADAPTOR/MOGULBASE**	LED Retrofit HID Mogul Base Adaptor
41145	LEDHIDRREMOTE	Remote Control
41146	LEDHIDRSENSORMICROWAVEMOTDAY	Motion and Daylight Sensor

*Also compatible with HIDr AREA LIGHT and HIDr High Bay.
**Enables lamps with E26 medium base to be used in EX39 mogul base socket applications.

Mogul Base Adaptor

Remote Control

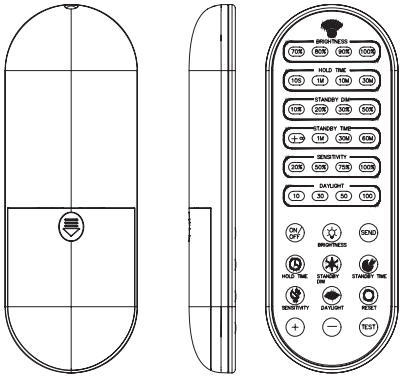

Motion and Daylight Sensor

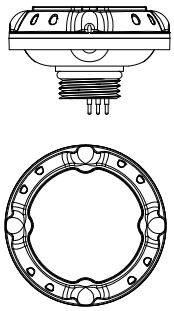

Physical Information

Lamp Description	(A) Length (in)	(B) Diameter (in)
LED HIDr 12W	5.3	2.3
LED HIDr 18W	5.8	2.3
LED HIDr 27W	6.8	2.3
LED HIDr 36W	7.5	3.3
LED HIDr 45W	9.9	3.3
LED HIDr 54W	9.9	3.3
LED HIDr 80W	9.9	5.1
LED HIDr 100W	10.4	5.1
LED HIDr 120W	11.2	5.1

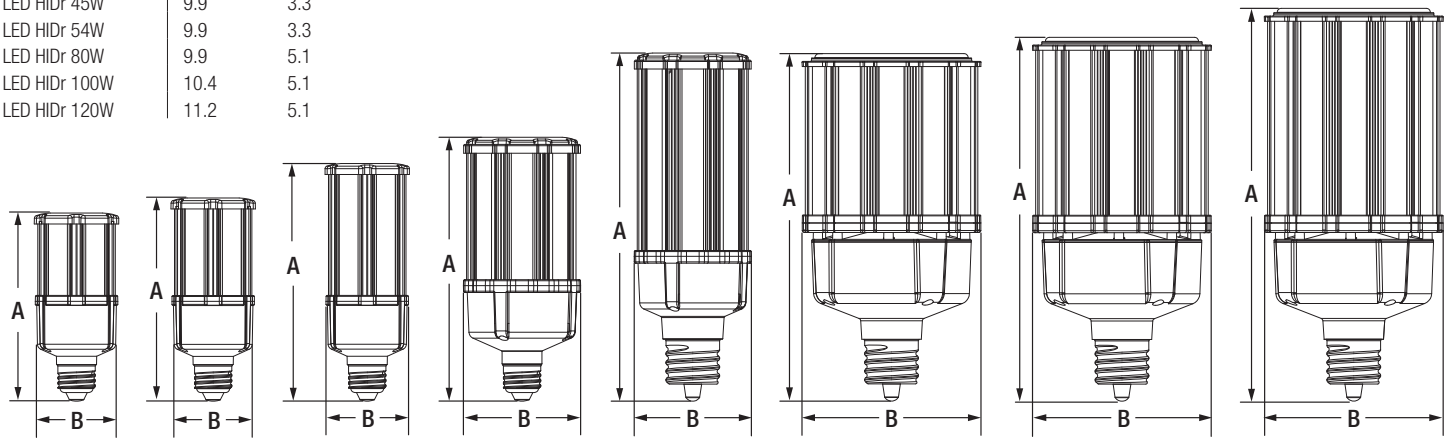

Additional Specifications

- Verify fixture size before installation to ensure fit.
- Dimming function can only be enabled either through a physical knob on 27W–120W lamps or by pairing with a SYLVANIA motion sensor and remote control (purchased separately) for 80W–120W lamps. Dimming is not compatible with other dimmers.
- Not suited with outdoor fixtures with air vents.
- Should not be directly exposed to water.

LEDVANCE LLC
200 Ballardvale Street
Wilmington, MA 01887 USA
Phone 1-800-LIGHTBULB (1-800-544-4828)
www.sylvania.com

SYLVANIA and LEDVANCE are registered trademarks.
All other trademarks are those of their respective owners.
Licensee of product trademark SYLVANIA in general lighting.
Specifications subject to change without notice.

/sylvania /sylvania

© 2021 LEDVANCE LLC