RHLED

LED OUTDOOR POLYCARBONATE / DIE-CAST REMOTE HEAD

ILLUMINATION

- *Long lasting, efficient, ultra bright white LED lamp heads.*
- *1.0 watt (8 LEDs x 0.125 watt) per head.*
- *High performance chrome-plated metalized reflector and plastic lens for optimal light distribution.*
- *Adjustable LED lamp heads provide optimal center-to-center spacing.*
- *Optional high lumen heads are 1.5 watts (12 LEDs x 0.125 watt per head) and provide increased center-to-center spacing.*

ELECTRICAL

- *Powered from low voltage power source with low voltage wiring (not provided).*

MOUNTING

- *Universal mounting adapter plate included. Mounts to single-gang switch box.*
- *Distance of maximum run is determined by system voltage, wire gauge and total maximum wattage on the run.*
- *Suitable for wall or ceiling mount.*

HOUSING

- *Available in both engineering grade, high-impact resistant polycarbonate or premium grade die-cast aluminum housing.*
- *Sealed and gasketed in standard gray or black finish.*

WARRANTY / LISTING

- *Five year warranty.*
- *UL Listed with approved Best Lighting Products.*
- *Meets UL924, NFPA 101 Life Safety Code, NEC, OSHA, Local and State Codes.*

DIMENSIONS

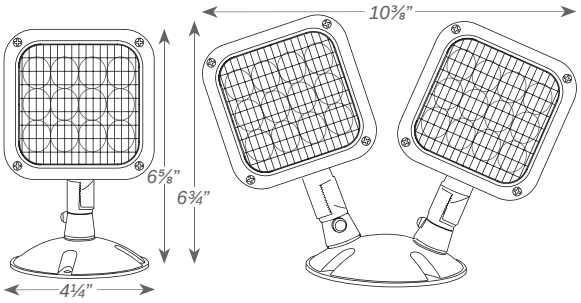

FIXTURE COMPATIBILITY LIST

Reference individual unit equipment specification sheets for remote load capacity availability.

BEST LIGHTING MODEL TYPE		
EZXTEU-RC*	LEDCXTEU-RC	CXTEU-RC*
CLPU	CEU-RC	CKXTEU-RC
LEDR5HO	R-5HO*	E-1-RC
R-16HO*	RMR-16-65/125	LEDTFX-2
TFX-2	DXR	CADXR
CAR	NYDXR	LEDCADXR
LEDSDXR627	CWLEZXTE-RC	RMLEDCXTE-RC
RMCLPU-RC	CALEDCXTE-RC	

** SDT versions of the fixtures are not compatible with the RHLED heads .*

ORDERING INFORMATION

Sample Part Number: **RHLED1-WP-MV**

MODEL	No. of HEADS		OPTIONS		HOUSING		VOLTAGE		COLOR		LAMP TYPE[1]	
RHLED	*1*	*Single Head*	*(blank)*	*For Standard Non-Self-Diagnostic Fixtures*	*PWP*	*Polycarbonate*	*MV*	*For Use With 3.6V, 6V, 9.6V & 12V DC Power Source*	*(blank)*	*Gray*	*(blank)*	*8 LEDs 1W*
	2	*Double Head*	*SDT*	*For Use With Fixtures With A Self-Diagnostic Option*	*WP*	*Die-Cast*			*B*	*Black*	*HL*	*12 LEDs 1.5W*

www.emergency-lighting.com

[1] *Wattage rating stated per head.*