Toggle Slide Controls

Classic style for the traditional home.

APPLICATION

Toggle Slide Controls are designed for both single pole (one location) and 3-way (two location) applications. They feature a traditional toggle switch that provides preset ON/OFF switching and a smooth, integrated slide bar for fine adjustment of lighting levels.

Toggle Slide Dimmers provide smooth, slide-action, full-range dimming for incandescent, dimmable LED, dimmable CFL, halogen and magnetic low voltage (MLV) loads. The line also includes a Fan Speed Control.

For a traditional home, the classic style of Toggle Slide Controls offers the ideal way to upgrade the functionality of devices without compromising the character of the décor.

FEATURES AND BENEFITS

- Integrated linear full-range slide control for easy, precise operation
- Separate ON/OFF toggle switch that preserves the selected setting
- Provides single pole (one location) or 3-way (two location) control when paired with a 3-way switch
- Slim, compact housing fits easily into a standard wallbox
- Suitable for multi-gang installations
- No removal of fins required for multi-gang installations
- Available in White, Ivory and Light Almond. TSL06 also available in Gray, Black and Brown color options.
- Built-in radio/TV interference filter

LED/CFL/Incandescent/Halogen MLV Dimmers

- TSL06 and TSM10 designed for optimal control of dimmable LED and CFL lamps
- TSM10 also compatible with Magnetic Low Voltage lamps
- Microprocessor control offers flexibility to fine-tune for best performance with LEDs and CFLs
- Setting available for ensuring start up for CFL lamps
- Wider dimming range for LED and CFL lamps than conventional incandescent dimmers
- Programming feature allows users to adjust the dimming range to optimize low light level performance when required
- Forward phase control
- Locator light built into switch can be disabled

Quiet Fan Speed Control

- 1.5 Amp, 3-speed
- Combines a toggle ON/OFF switch with a contemporary slender slide bar for the selection of low, medium or high fan speeds
- Ideal for libraries, home offices, bedrooms and any area where ceiling fan noise could become distracting

TYPICAL SPECIFICATIONS

Operating Temperature Range - 0°C to 55°C
Storage Temperature Range - -10°C to 85°C
Relative Humidity – 20% to 90% Non-Condensing

AGENCY STANDARDS AND COMPLIANCE

Dimmers

- cCSAus Certified to Standard 184.1
- Complies with UL 1472
- NOM

Fan Speed Control

- cCSAus Certified to C22.2 No. 156
- Complies with UL 1917
- NOM

WARRANTY INFORMATION

Five-Year Limited Warranty

INSTALLATION CONSIDERATIONS

TSL06 and TSM10: LED and CFL lamps marked or rated as dimmable can be used with this dimmer. For a complete list of approved LED lamps visit **www.leviton.com/universal**

SPECIFICATIONS AT-A-GLANCE

	TSL06	TSM10	TSF01
Voltage, Frequency	**Dimmer**	**Dimmer**	**Fan Speed Control**
120VAC-60Hz	Yes	Yes	Yes
Load Rating			
Incandescent/ Halogen	600W	1000W	-
LED/CFL	300W	400W	-
MLV	-	1000VA	-
Motor	-	-	1.5A
Mechanical			
Neutral Required	No	No	No
Single Pole/3-Way	Yes	Yes	Yes
Locator Light	Yes	Yes	No

MAXIMUM LOAD FOR MULTI-GANG APPLICATIONS

In multi-gang applications de-rating may be required in accordance with the following chart.

Maximum Load for Multi-Gang Applications			
Cat. No.	**Single**	**2-gang**	**3-gang or more**
TSL06	600W Incandescent 300W (2.5A) LED/CFL	500W Incandescent 300W (2.5A) LED/CFL	500W Incandescent 300W (2.5A) LED/CFL
TSM10	1000W Incandescent 1000VA MLV 400W (3.75A) LED/CFL	800W Incandescent 800VA MLV 400W (3.33A) LED/CFL	700W Incandescent 700VA MLV 400W (3.33A) LED/CFL
TSF01	1.5A	1.5A	1.5A

DIMENSIONAL DRAWINGS

Cat. No. TSL06

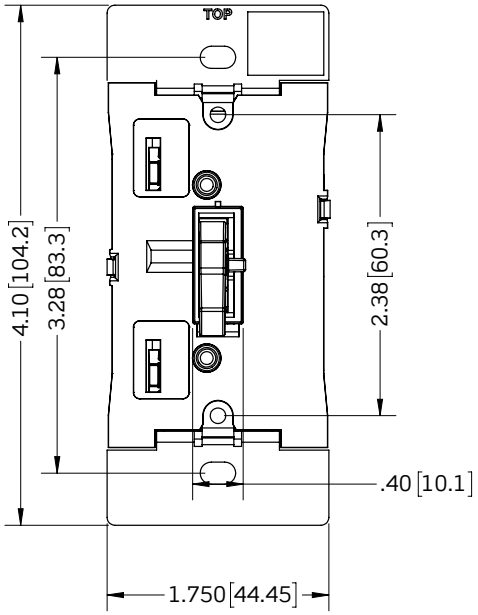

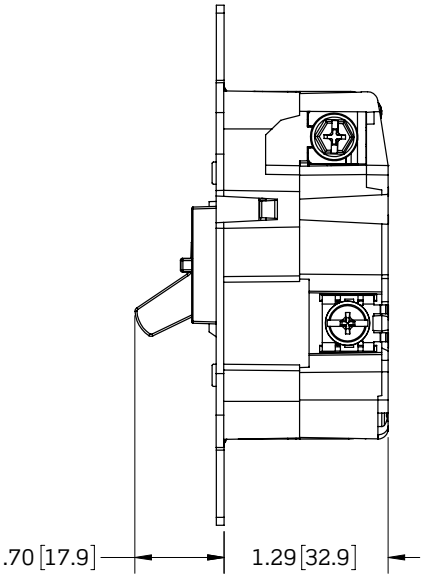

Cat. No. TSM10, TSF01

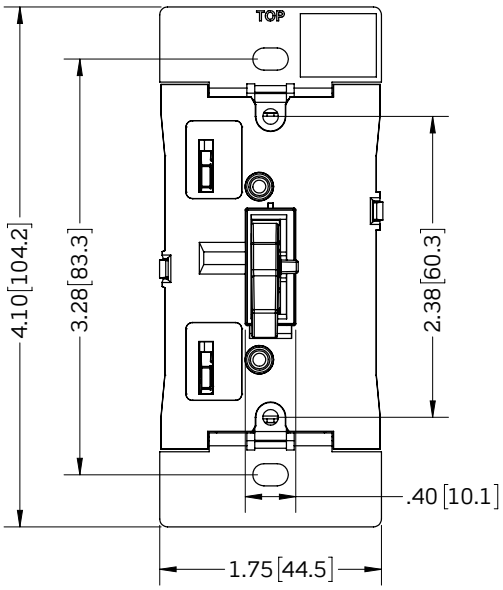

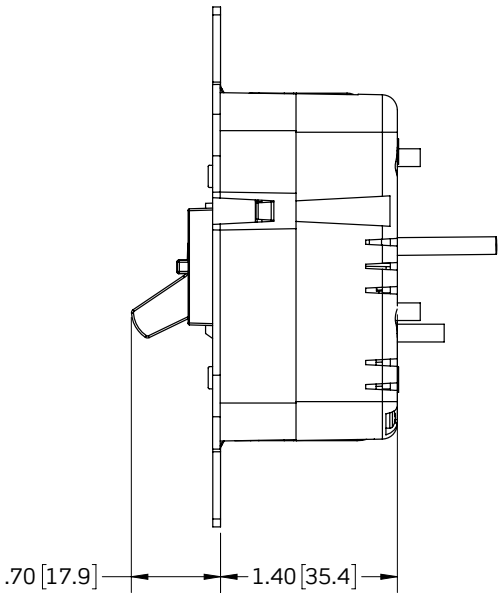

WIRING DIAGRAMS

Cat. No. TSL06 Universal Dimmer

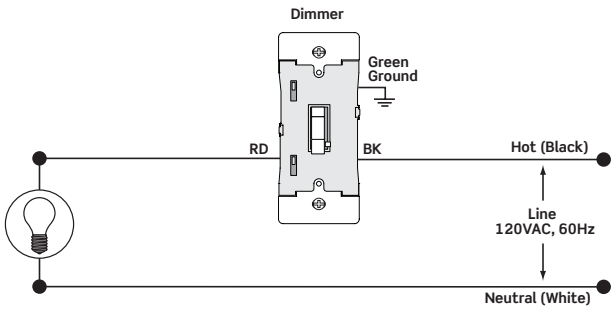

Single Pole

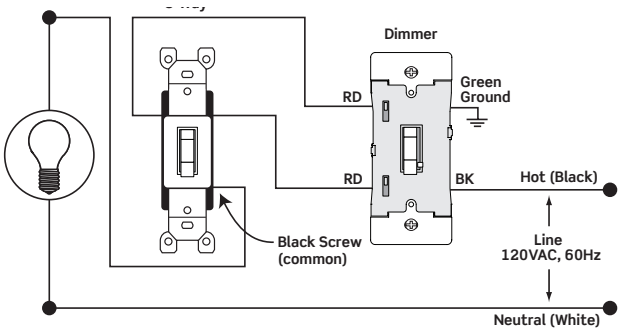

3-Way

Cat. No. TSM10 Universal Dimmer

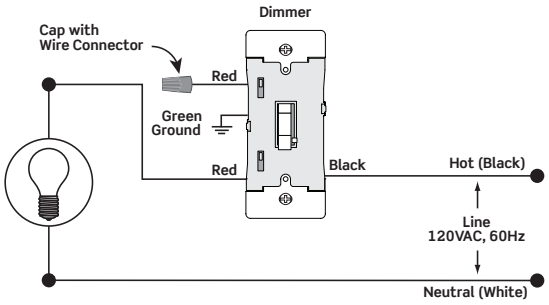

Single Pole

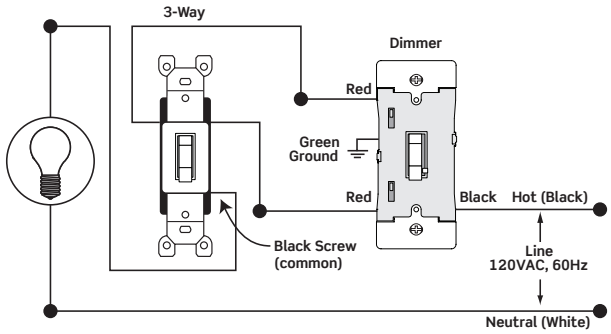

3-Way

Cat. No. TSF01 Fan Speed Control

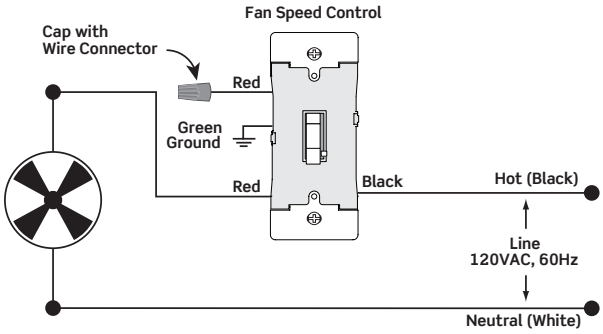

Single Pole

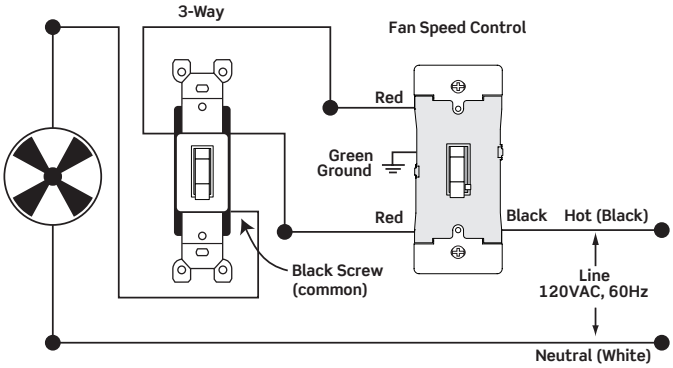

3-Way

ORDERING INFORMATION

Cat. No.	Description	Rating	Color*
TSL06	Incandescent, LED, CFL dimmer with locator light	600W Incandescent 300W LED/CFL	W, I, T, G, E, B
TSM10	Incandescent, MLV, LED, CFL dimmer with locator light	1000W Incandescent/MLV 400W LED/CFL	W, I, T
TSF01	Quiet Fan Speed Control, 3 speed	1.5A	W, I, T

**To order colors, add suffix to basic catalog number: White (-W), Ivory (-I), Light Almond (-T).*

Leviton Manufacturing Co., Inc.
201 North Service Road, Melville, NY 11747-3138
Telephone: 1-800-323-8920 • FAX: 1-800-832-9538
Tech Line: 1-800-824-3005
Mon-Fri 8am-10pm EST, Saturday 9am-7pm EST

Visit our Website at: www.leviton.com/universal

© 2018 Leviton Manufacturing Co., Inc. All rights reserved.
All trademarks are the property of their respective owners.